250KW DIESEL GENERATOR INSTALLATION

1 CLARIDGE DRIVE, VERONA, NJ 07044

SCOPE OF WORK:

THIS CONTRACTOR SHALL FURNISH ALL LABOR AND MATERIAL NECESSARY FOR COMPLETE INSTALLATION OF ALL ELECTRICAL WORK AS INDICATED ON DRAWINGS AND HEREIN SPECIFIED, INCLUDING BUT NOT LIMITED TO THE FOLLOWING:

1. INSTALLATION OF NEW 250KW; 3-PHASE; 120/208V DIESEL GENERATOR
2. FEEDER AND CONDUIT ROUTING
3. DISCONNECT AND REMOVAL
4. TEMPORARY LIGHT AND POWER

GENERAL NOTES:

1. ALL WORK SHALL BE DONE IN ACCORDANCE WITH THE MOST CURRENT EDITION OF THE NEW JERSEY CODES AND REGULATIONS, NATIONAL ELECTRICAL CODE AND IN CONFORMANCE WITH LOCAL AND STATE AUTHORITIES HAVING JURISDICTION. IF CONFLICTS EXIST BETWEEN REQUIREMENTS, THE MOST STRINGENT CODE SHALL PREFERENCE.

2. THE CONTRACTOR SHALL INVESTIGATE THE PROJECT SITE AND EXISTING CONDITION PRIOR TO THE START OF THE PROJECT. ALL EXISTING CONDITIONS AND DIMENSIONS SHALL BE VERIFIED. DISCREPANCIES SHALL BE BROUGHT TO THE ATTENTION OF THE OWNER AND THE ENGINEER.

3. THE WORK SHALL INCLUDE ALL MATERIAL AND LABOR NECESSARY TO COMPLETE THE WORK AS SHOWN ON THESE DRAWINGS AND FOR A COMPLETE INSTALLATION.

4. ALL MATERIALS AND WORKMANSHIP SHALL BE GUARANTEED FOR A PERIOD OF ONE (1) YEAR FROM DATE OF FINAL ACCEPTANCE OF THIS WORK. EQUIPMENT AND EQUIPMENT AND MATERIALS SHALL BE LISTED BY UNDERWRITERS LABORATORIES (UL), MANUFACTURED IN ACCORDANCE WITH ASME, ANSI, IEEE STANDARDS, WHERE APPLICABLE, AND ALL WORK MUST BE APPROVED BY LOCAL AUTHORITIES HAVING JURISDICTION.

5. ALL WORK SHALL BE COORDINATED WITH THE OTHER TRADES TO AVOID CONFLICT.

6. ALL CONTRACTORS AND SUBCONTRACTORS SHALL BE RESPONSIBLE FOR PROPER WORK INCLUDING, COORDINATION WITH OTHER TRADES, METHODS, SAFETY AND SECURITY ON THE JOB SITE.

7. THE CONTRACTOR SHALL REPAIR OR REPLACE, AS DIRECTED BY THE ARCHITECT / ENGINEER, AT NO ADDITIONAL COST TO THE OWNER, ANY ITEM DAMAGED DUE TO THE INSTALLATION, RELOCATION, OR REINSTALLATION.

CODES AND STANDARDS:

1. THE WORK SHALL BE PERFORMED IN ACCORDANCE WITH THE DRAWINGS AND SPECIFICATIONS. WHERE MORE STRINGENT REQUIREMENTS THAN THOSE DESCRIBED IN THE CONTRACT DOCUMENTS ARE SET FORTH UNDER CODES, LAWS AND ORDINANCES OF FEDERAL, STATE AND LOCAL GOVERNING BODIES HAVING JURISDICTION, THOSE GREATER REQUIREMENTS SHALL BE ADHERED TO.

2. ALL MATERIALS, EQUIPMENT AND INSTALLATION THEREOF SHALL CONFORM TO THE STANDARDS OF THE NATIONAL ELECTRICAL MANUFACTURERS ASSOCIATION (NEMA) AND OF THE UNDERWRITERS' LABORATORIES (UL).

3. APPLICABLE CODES INCLUDED:
   a. BUILDING SUBCODE *(NJAC 5:23-3.14)*
      - INTERNATIONAL BUILDING CODE 2021 - NJ EDITION
   b. ELECTRICAL SUBCODE *(NJAC 5:23-3.16)*
      - NATIONAL ELECTRICAL CODE (NFPA 70) 2020
   c. INTERNATIONAL BUILDING CODE FIRE PROTECTION SUBCODE 2021
   d. MECHANICAL SUBCODE *(NJAC 5:23-3.20)*
      - INTERNATIONAL MECHANICAL CODE 2021
   e. FUEL GAS SUBCODE *(NJAC 5:23-3.22)*
      - INTERNATIONAL FUEL GAS CODE 2021
   f. PLUMBING SUBCODE *(NJAC 5:23-3.15)*
      - NATIONAL STANDARD PLUMBING CODE 2021
   g. BARRIER FREE SUBCODE (*Chapter 11 of IBC 2021 & NJAC 5:23-7)*
      - ICC / ANSI A117.1-2017
   h. REHABILITATION SUBCODE *(NJAC 5:23-6)*
      - NJUCC, SUBCHAPTER 6

4. APPLICABLE LAWS AND AGENCY STANDARDS INCLUDE:
   a. AMERICAN NATIONAL STANDARD INSTITUTE *(ANSI)*
   b. AMERICAN SOCIETY FOR TESTING AND MATERIALS *(ASTM)*
   c. AMERICAN WITH DISABILITIES ACT *(ADA)*
   d. ASSOCIATION OF EDISON ILLUMINATING COMPANIES *(AEIC)*
   e. CERTIFIED BALLAST MANUFACTURERS *(CBM)*
   f. ELECTRICAL TESTING LABORATORIES *(ETL)*
   g. ELECTRONICS/TELECOMMUNICATIONS INDUSTRIES ASSOCIATION *(EIA/TIA)*
   h. ILLUMINATING ENGINEERING SOCIETY OF NORTH AMERICA *(IESNA)*
   i. INSTITUTE OF ELECTRICAL AND ELECTRONICS ENGINEERS *(IEEE)*
   j. INSULATED CABLE ENGINEERS ASSOCIATION *(ICEA)*
   k. NATIONAL ELECTRICAL MANUFACTURERS ASSOCIATION *(NEMA)*
   l. NATIONAL FIRE PROTECTION ASSOCIATION *(NFPA)*
   m. UNDERWRITES' LABORATORIES *(UL)*

ELECTRICAL SPECIFICATIONS:

GENERAL CONDITIONS

IT IS NOT INTENDED THAT THE PLANS OR SPECIFICATIONS SHOW OR STATE EVERY DETAILED REQUIREMENT OF THE WORK, BUT RATHER THAT THEY FURNISH ADEQUATE INFORMATION FOR THE CONTRACTOR TO MAKE A COMPLETELY APPROVED INSTALLATION.

MATERIALS: NEW, UNUSED, BEST OF THEIR RESPECTIVE KINDS AND FREE FROM DEFECTS AS INDICATED ON THE DRAWINGS: BASIS OF QUALITY SHALL BE LATEST STANDARDS OF ASTM, ASA, FEDERAL SPECIFICATIONS OR OTHER ACCEPTABLE STANDARDS.

CONTRACTOR SHALL COORDINATE HIS WORK WITH ALL OTHER TRADES.

ALL WORK SHALL BE INSTALLED READILY ACCESSIBLE FOR OPERATION, MAINTENANCE AND REPAIRS.

ALL WORK AND EQUIPMENT TO BE FULLY GUARANTEED FOR ONE (1) EAR FROM THE DATE OF FINAL ACCEPTANCE.

ALL CUTTING AND PATCHING SHALL BE DONE BY THIS CONTRACTOR. WORK SHALL ALSO INCLUDE WORK SHOWN ON STRUCTURAL PLANS.

STORE MATERIALS IN SPACES DESIGNATED BY CLIENT.

REMOVE RUBBISH FROM PREMISES AS OFTEN AS NECESSARY OR DIRECTED.

ALL WORK AND EQUIPMENT SHALL BE CLEANED TO THE SATISFACTION OF THE CLIENT BEFORE TURNING SAME OVER TO THE CLIENT.

THIS CONTRACTOR SHALL PAY ALL FEES, GIVE ALL NOTICES, FILE ALL NECESSARY DRAWINGS AND OBTAIN ALL PERMITS AND CERTIFICATED OF APPROVAL REQUIRED IN CONNECTION WITH ALL WORK UNDER THE CONTRACT. HE SHALL COMPLY WITH NATIONAL ELECTRICAL CODE AND ALL LOCAL LAWS, ORDINANCES, RULES AND REGULATIONS HAVING JURISDICTION.

ALTERATION WORK

THE EXISTING SYSTEMS SHALL BE LEFT IN PERFECT WORKING ORDER UPON COMPLETION OF ALL NEW WORK.

LOCATIONS AND SIZES OF EXISTING WORK ARE APPROXIMATE. EXACT SIZES, LOCATIONS AND NEW CONNECTIONS TO ALL EXISTING PIPING SHALL BE VERIFIED AT JOB SITE, BEFORE STARTING WORK.

THIS CONTRACTOR SHALL NOT INTERRUPT ANY OF THE SERVICES OF THE EXISTING BUILDING NOR INTERFERE WITH THE SERVICES IN ANYWAY WITHOUT THE EXPRESSED PERMISSION OF THE CLIENT. SUCH INTERRUPTIONS AND INTERFERENCES SHALL BE MADE AS BRIEF AS POSSIBLE, AND ONLY AT THE TIMES STIPULATED BY THE CLIENT.

UNDER NO CIRCUMSTANCES WILL THIS CONTRACTOR OR HIS WORKMEN BE PERMITTED TO USE ANY PART OF THIS BUILDING AS A SHOP, EXCEPT AREAS DESIGNATED BY THE CLIENT FOR SUCH PURPOSES.

UNNECESSARY NOISE SHALL BE AVOIDED AT ALL TIMES AND NECESSARY NOISE SHELL BE REDUCED TO A MINIMUM.

ALL WORK, FIXTURES AND EQUIPMENT SHALL BE CLEANED TO THE SATISFACTION OF THE CLIENT BEFORE TURNING SAME OVER TO CLIENT.

BIDDERS, BEFORE SUBMITTING A PROPOSAL, SHALL CONDUCT A SITE VISIT AND EXAMINE CAREFULLY THE AREAS AFFECTED BY THIS PROJECT TO BECOME FAMILIAR WITH EXISTING CONDITIONS. AND WITH THE DIFFICULTIES THAT WILL ATTEND TO EXECUTION OF THIS PROJECT. SUBMISSION OF PROPOSAL WILL BE CONSTRUED AS EVIDENCE THAT SUCH BID HAS BEEN MADE. LATER CLAIMS WILL NOT BE RECOGNIZED FOR EXTRA LABOR, EQUIPMENT OR MATERIALS REQUIRED BECAUSE OF DIFFICULTIES ENCOUNTERED WHICH COULD HAVE BEEN FORESEEN HAD SUCH AN EXAMINATION BEEN MADE.

CONTRACTOR SHALL NOTIFY ENGINEER OF ANY CONDITIONS FOUND DURING THE CONSTRUCTION WHICH CONFLICT WITH OR AFFECT THE DESIGN ACCORDINGLY. CONTRACTOR SHALL STOP HIS WORK WHERE CONDITIONS WERE FOUND UNTIL FURTHER INVESTIGATION AND MODIFICATIONS TO DESIGN ARE DONE AND ISSUED BY THE ENGINEER.

PREPARE AND FURNISH TO THE CLIENT "AS-BUILT" PLANS FOR ALL WORK INSTALLED. ALL PARTS OF THE WORK SHALL BE TESTED AND ADJUSTED TO WORK PROPERLY AND BE LEFT IN PERFECT OPERATING CONDITION. CORRECT DEFECTS DISCLOSED BY THESE TESTS WITHOUT ANY ADDITIONAL COST TO THE CLIENT.

CUTTING AND PATCHING

THE CONTRACTOR SHALL DO ALL CUTTING AND PATCHING REQUIRED TO SATISFACTORILY PERFORM HIS WORK. NO STRUCTURAL MEMBER SHALL BE CUT WITHOUT THE PRIOR APPROVAL OF THE ENGINEER.

SHOP DRAWINGS APPROVAL AND SUBSTITUTION

SHOP DRAWINGS SHALL BE SUBMITTED FOR APPROVAL PRIOR TO ORDERING AND INSTALLATION OF SAME, FIVE COPIES OF EACH SUBMITTAL ARE REQUIRED.

IT IS INTENT OF THE SPECIFICATIONS THAT WHEREVER A MANUFACTURER IS SPECIFIED AND SUBSTITUTIONS ARE MADE, THEY SHALL CONFORM IN ALL RESPECT TO THE SPECIFIED ITEM. CRITERIA AS DELINEATED FOR EQUIPMENT SHALL BE INTERPRETED AS MINIMUM PERFORMANCE REQUIREMENTS.

SUBSTITUTED EQUIPMENT WHERE PERMITTED MUST CONFORM TO SPACE REQUIREMENT, ANY SUBSTITUTED EQUIPMENT THAT CANNOT MEET SPACE REQUIREMENTS WHETHER APPROVED OR NOT SHALL BE REPLACED AT THE CONTRACTOR'S EXPENSE. ANY MODIFICATION OF RELATED SYSTEMS OR ADDITIONAL COSTS THAT RESULT FROM SUBSTITUTED EQUIPMENT SHALL BE BORNE BY THIS CONTRACTOR.

GROUNDING

GROUND ALL EQUIPMENT IN ACCORDANCE WITH THE NATIONAL ELECTRICAL CODE ARTICLE 250 AS SHOWN ON PLANS AND AS REQUIRED BY ELECTRIC UTILITY COMPANY.

HANGERS AND SUPPORTS

PROVIDE ALL NECESSARY HANGERS AND SUPPORT FOR ALL RACEWAYS *(CONDUIT AND TUBING)* AS REQUIRED BY THE NATIONAL ELECTRICAL CODE *(ARTICLES 345 THROUGH 351)* AND ALL OTHER APPLICABLE CODES HAVING JURISDICTION AND AS RECOMMENDED BY THE MANUFACTURERS.

ALL RACEWAYS SHALL BE SUPPORTED FROM THE BUILDING STRUCTURE BY MEANS OF APPROVED HANGERS AND SUPPORTS.

THE SPACING OF HANGERS SHALL NOT BE GREATER THAN 10' O.C. FOR PIPE 1-1/2" AND LARGER; 6' O.C. FOR PIPE SMALLER THAN 1-1/2". MALLEABLE IRON BRACKETS OF APPROVED TYPE SHALL BE USED ALONG THE WALLS.

RACEWAYS SHALL NOT BE HUNG FROM THE PIPING, DUCTWORK OR CONDUIT OF OTHER TRADES.

INSERTS, ANCHORS, CLAMPS, ETC., FOR SECURING HANGERS SHALL BE MAINTAINED BY THIS CONTRACTOR IN THE PROPER LOCATIONS DURING ALL PHASES OF CONSTRUCTION.

TEST

BEFORE THE WORK IS ACCEPTED BY THE CLIENT, THE CONTRACTOR SHALL TEST ALL SYSTEMS AS DIRECTED. ANY DEFECTS SHALL PROMPTLY BE REMEDIED AND AT COMPLETION, ALL ELECTRICAL WORK SHALL BE LEFT IN PERFECT CONDITION.

GUARANTEE

ALL WORK SHALL BE GUARANTEED TO BE FREE FROM DEFECTS IN WORKMANSHIP AND MATERIALS FOR A PERIOD OF ONE (1) YEAR FROM DATE OF FINAL ACCEPTANCE BY THE CLIENT, UNLESS EQUIPMENT MANUFACTURER'S GUARANTEE COVERS A LONGER PERIOD. SUBMIT A SEPARATE PRICE FOR ANY EXTENDED WARRANTIES THAT ARE AVAILABLE FROM MANUFACTURERS

ABBREVIATIONS:

(not all appears in this project)

A / AMP	-	AMPERES
AC	-	ALTERNATING CURRENT
AF/AT	-	AMPERE FRAME / AMPERE TRIP
AIC	-	AMPERE INTERRUPTING CAPACITY
AS/AF	-	AMPERE SWITCH / AMPERE FUSE
C	-	CONDUIT
CB	-	CIRCUIT BREAKER
CKT	-	CIRCUIT
C/T	-	CURRENT TRANSFORMER
CU	-	COPPER
DIA	-	DIAMETER
DISC	-	DISCONNECT
ELEC	-	ELECTRIC or ELECTRICAL
EM / EMER	-	EMERGENCY
EQUIP	-	EQUIPMENT
F	-	FUSE
FDS	-	FUSED DISCONNECT SWITCH
FLA	-	FULL LOAD AMPERE
G	-	GROUND
GEN	-	GENERAL or GENERATOR
GFAR	-	GROUND FAULT ALARM RELAY
GFCI	-	GROUND FAULT CURRENT INTERRUPTER
GFP	-	GROUND FAULT PROTECTION
HP	-	HORSEPOWER
HZ	-	HERTZ
IC	-	INTERRUPTING CAPACITY
KCMIL	-	KILO CIRCULAR MILS
KVA	-	KILOVOLT-AMPERE
KW	-	KILOWATT
MCA	-	MINIMUM CIRCUIT AMPERE
MCB	-	MAIN CIRCUIT BREAKER
MLO	-	MAIN LUGS ONLY
N	-	NEUTRAL
NEC	-	NATIONAL ELECTRICAL CODE
NF	-	NON-FUSED
NTS	-	NOT TO SCALE
P	-	POLE
PH	-	PHASE
SW	-	SWITCH
UG	-	UNDERGROUND
UON	-	UNLESS OTHERWISE NOTED
V	-	VOLT or VOLTAGE
VA	-	VOLTAGE-AMPERE
W	-	WATT or WATTAGE
WP	-	WEATHERPROOF
XFMR	-	TRANSFORMER
XP	-	EXPLOSION PROOF

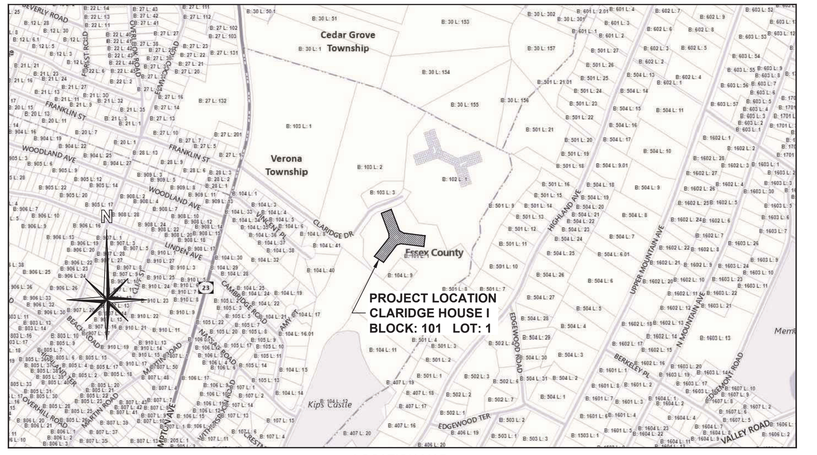

1 LOCATION MAP
NOT TO SCALE

NO.	DESCRIPTION	DATE
01	ZONING COMMENTS	09-03-2026
00	ISSUED FOR PERMIT	04-16-2026

REVISION HISTORY

This plan is approved for work indicated on the application specification sheet. All other matters shown are not to be relied upon or to be considered as either been approved or in accordance with applicable codes.

Warning: It is a violation of the state education law for any person, unless acting under the direction of a licensed professional engineer, to alter any item on this plans in any way. If alterations to these plans are made, the alterations shall be made in accordance with the appropriate regulations.

ARCO ENGINEERING, PC
1050 WALL ST. WEST, SUITE 645,
LYNDHURST, NJ 07071
T: 201 635 0282

PROJECT:
250KW DIESEL GENERATOR INSTALLATION

PROJECT LOCATION:
1 CLARIDGE DRIVE,
VERONA, NJ 07044
BLOCK: 101 LOT: 1

CLIENT:
CLARIDGE HOUSE ONE

TITLE:
ELECTRICAL SPECIFICATIONS, GENERAL NOTES, CODES & STANDARDS, ABBREVIATIONS, AND LOCATION MAP

SCALE	AS SHOWN
DATE	09-03-2026
DRAWN	JBA
DESIGN	JBA
SIZE	D
FILE NO.	25P368895
SHEET	01 OF 04

JOSEPH BARTOLOMEO, PE
NY071371 / NJ24162

DRAWING NO.
E-001.00

A R C O Engineering, PC



1 SITE PLAN - ZONING ANALYSIS *
SCALE: 1/64" = 1'-0"

* PREPARED FROM TAX MAP INFORMATION AND PARTIAL SURVEY PROVIDED BY PRONESTI SURVEYING INC DATED 03/04/2026.

ZONING TABLE - BASED ON: A-2 (MULTIFAMILY HIGH RISE) ZONE DISTRICT §150-17.9

ZONING ITEM	PERMITTED	EXISTING	PROPOSED	CHANGE	VARIANCE REQUIRED Y/N	COMMENTS
A. PRINCIPAL PERMITTED USES	1) APARTMENT HOUSES 2) SENIOR CITIZEN HOUSING	APARTMENT HOUSE	NO CHANGE	NO CHANGE	NO	NONE
B. PERMITTED ACCESSORY USES	1) PARKING GARAGE. 2) SWIMMING POOL AND RELATED FACILITIES 3) BASKETBALL COURT, UNLIT 4) TENNIS COURT, UNLIT	EXISTING SURFACE PARKING, SWIMMING POOL / FACILITIES, TENNIS COURT.	NO CHANGE	NO CHANGE	NO	NONE
C. CONDITIONAL USES	1) A SATELLITE OR DISH ANTENNA INSTALLED IN THE SIDE OR REAR YARD, SUBJECT TO THE CONDITIONS SET FORTH IN § 150-7.11 OF THIS CHAPTER. 2) HOME OCCUPATIONS SUBJECT TO THE CONDITIONS SET FORTH IN § 150-8.8 OF THIS CHAPTER.	N/A	NO CHANGE	NO CHANGE	NO	NONE
D. AREA, YARD AND BULK REGULATIONS.						
1. MINIMUM LOT SIZE:	8 ACRES	~7.80 ACRES	NO CHANGE	NO CHANGE	NO	NONE
2. MINIMUM LOT WIDTH:	300 FEET	EXISTING	NO CHANGE	NO CHANGE	NO	NONE
3. MINIMUM FRONT YARD SETBACK:	100 FEET	EXISTING	NO CHANGE	NO CHANGE	NO	NONE
4. MINIMUM SIDE YARD SETBACK:	100 FEET	EXISTING	INSTALLATION OF NEW 250kW GENERATOR	INSTALLATION OF NEW GENERATOR WITHIN SIDE YARD SETBACK	**YES**	VARIANCE REQUIRED FOR PROPOSED GENERATOR ENCROACHING INTO SIDE YARD SETBACK
5. MINIMUM SIDE YARD SETBACK S (BOTH):	250 FEET	EXISTING	NO CHANGE	NO CHANGE	NO	NONE
6. MINIMUM SIDE YARD SETBACKS (BOTH) PERCENTAGE OF LOT WIDTH:	N/A	EXISTING	NO CHANGE	NO CHANGE	NO	NONE
7. MINIMUM REAR YARD SETBACK:	15 FEET	EXISTING	NO CHANGE	NO CHANGE	NO	NONE
8. MAXIMUM DENSITY FOR LOTS UNDER 10 ACRES. DWELLING UNITS PER ACRE :	35	EXISTING	NO CHANGE	NO CHANGE	NO	NONE
9. MAXIMUM DENSITY FOR LOTS OVER 10 ACRES. DWELLING UNITS PER ACRE :	25	EXISTING	NO CHANGE	NO CHANGE	NO	NONE
10. MAXIMUM HEIGHT (STORIES / FEET):	10 / 120	EXISTING	NO CHANGE	NO CHANGE	NO	NONE
11. MAXIMUM LOT COVERAGE :	25%	EXISTING	NO CHANGE	NO CHANGE	NO	NONE
12. MAXIMUM IMPROVED LOT COVERAGE :	75%	~62%	~62.04%	+ 0.04% (INCREASE)	NO	IMPROVED LOT COVERAGE INCREASE DOES NOT EXCEED ALLOWABLE MAXIMUM.
E. AREA, YARD AND BULK REGULATIONS FOR ACCESSORY STRUCTURES AND USES SHALL BE AS FOLLOWS:						
1. MINIMUM SIDE YARD SETBACK (ONE)	8 FEET	NONE	8 FEET	8 FEET	NO	NONE
2. MINIMUM REAR YARD SETBACK:	10 FEET	NONE	10 FEET	10 FEET	NO	NONE
3. MINIMUM DISTANCE BETWEEN ACCESSORY AND PRINCIPAL STRUCTURES:	10 FEET	NONE	85 FEET	85 FEET	NO	NONE
4. MAXIMUM AGGREGATE AREA COVERED BY ACCESSORY STRUCTURES IN THE YARD IT IS LOCATED IN:	15%	NONE	127 S.F. / 0.003%	AREA USED BY ACCESSORY: 127 SF	NO	AREA COVERED BY ACCESSORY USE: 127 S.F. (0.003%) OF SIDE YARD.
5. MAXIMUM HEIGHT (STORIES / FEET):	1-1/2 STORIES, 15 FEET	NONE	6' - 2"	6' - 2"	NO	HEIGHT DOES NOT EXCEED ACCESSORY LIMIT

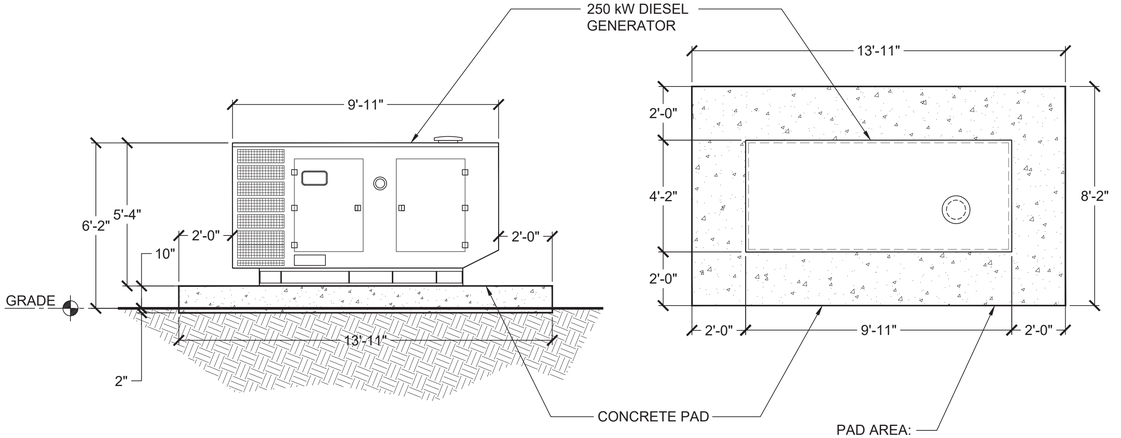

250 kW DIESEL GENERATOR - SIDE ELEVATION VIEW

250 kW DIESEL GENERATOR - PLAN VIEW

2 GENERATOR AND CONCRETE PAD DETAILS
SCALE: 3/8" = 1'-0"

NO.	DESCRIPTION	DATE
01	ZONING COMMENTS	09-03-2026
00	ISSUED FOR PERMIT	04-16-2026

REVISION HISTORY

This plan is approved for work indicated on the application specification sheet. All other matters shown are not to be relied upon or to be considered as either been approved or in accordance with applicable codes.

Warning: It is a violation of the state education law for any person, unless acting under the direction of a licensed professional engineer, to alter any item on this plans in any way. If alterations to these plans are made, the alterations shall be made in accordance with the appropriate regulations.

ARCO ENGINEERING, PC
1050 WALL ST. WEST, SUITE 645,
LYNDHURST, NJ 07071
T: 201 635 0282

PROJECT:
250KW DIESEL GENERATOR INSTALLATION

PROJECT LOCATION:
1 CLARIDGE DRIVE,
VERONA, NJ 07044
BLOCK: 101 LOT: 1

CLIENT:
CLARIDGE HOUSE ONE

TITLE:
SITE PLAN WITH ZONING ANALYSIS

SCALE	AS SHOWN
DATE	09-03-2026
DRAWN	AR
DESIGN	LM
SIZE	D
FILE NO.	25P36-855
SHEET	02 OF 04

JOHN J. MESIANO, P.E.
NY 092104162

DRAWING NO.
E-002.00

A R C O Engineering, PC

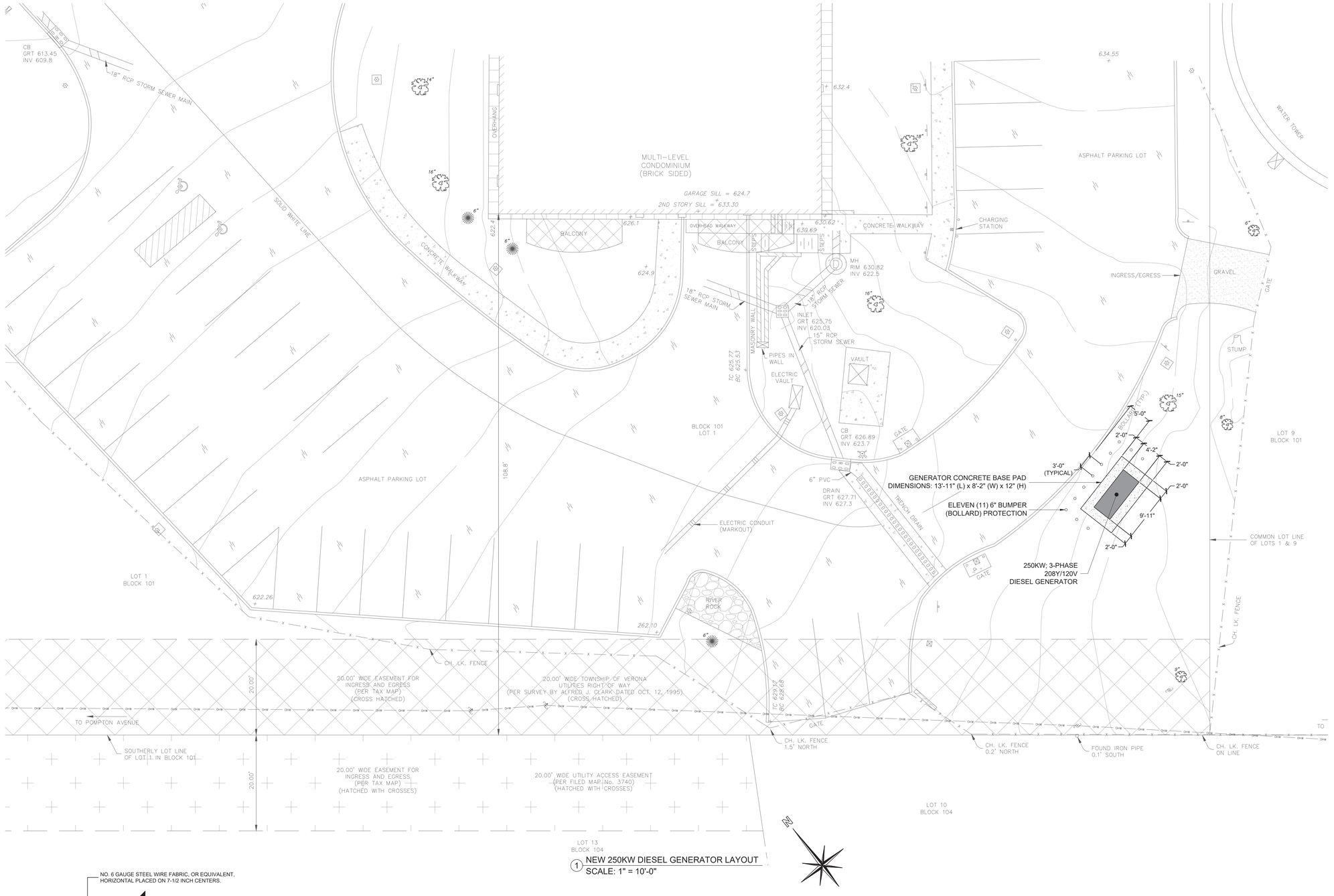

1 NEW 250KW DIESEL GENERATOR LAYOUT
SCALE: 1" = 10'-0"

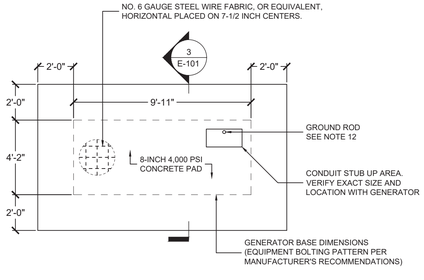

2 250KW GENERATOR CONCRETE BASE PAD DETAIL
SCALE: 1/4" = 1'-0"

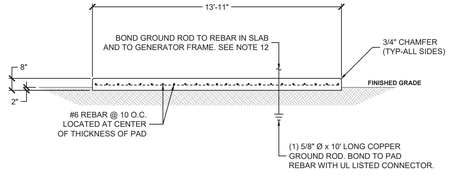

3 250KW GENERATOR CONCRETE BASE PAD DETAIL
SCALE: 1/4" = 1'-0"

GENERATOR PAD GENERAL NOTES:

1. THE TOP 12" OF SUBGRADE BENEATH THE SLAB SHALL BE THOROUGHLY COMPACTED TO 90% OF MAXIMUM DENSITY PER ASTM D698. IF TOP 36" OF SUBGRADE IS SUBJECT TO HIGH WATER TABLE OR PERIODIC SATURATION, COMPACT SUBGRADE TO 90% PER ASTM D2039 AND D1556. NO FROZEN BACKFILL SHALL BE USED.
2. SLAB TO BE MADE OF FIBER REINFORCED POLYMER (FRP) CONCRETE WITH MINIMUM 28 DAY STRENGTH OF 4,500 PSI WITH 2-INCH LENGTH OF MONOFILAMENT MACROSYNTHETIC FIBERS AT APPROXIMATELY 4 LB/YD^3 DOSAGE. ADD AIR-ENTRAINING ADMIXTURE CONFORMING TO ASTM C260/C260M.
3. TOP OF PAD TO BE SMOOTH, LEVEL AND CLEARED OF ALL FRAMING MATERIAL AFTER CONCRETE SETS.
4. NO WALLS SHALL BE BUILT AROUND GENERATOR, NOR CANOPIES ABOVE GENERATOR.
5. ALL CONDUIT ENTERING SLAB TO BE VERTICAL AND AT A 90° ANGLE WITH TOP OF SLAB. STUB ALL CONDUITS 1" ABOVE TOP OF CONCRETE PAD. PROVIDE ALL SPARE CONDUITS WITH PULLSTRINGS AND PLASTIC CAPS.
6. COORDINATE WITH UNL UTILITIES TO ALLOW ANY AND ALL INSPECTIONS BEFORE, DURING AND AFTER CONSTRUCTION OF PAD.
7. PROPER REBAR SPACERS SHOULD BE USED TO KEEP THE REBAR AT PLACE. USE OF CONCRETE BRICKS AS SUBSTITUTE OF SPACERS IS NOT PERMITTED.
8. ALL REBAR SHOULD AT LEAST HAVE 3" COVER FROM THE SIDES OTHERWISE NOTED.
9. REVIEW GENERATOR INSTALLATION INSTRUCTIONS BEFORE FORMING THE CONDUIT STUB UP AREA. PROVIDE AREA PER MANUFACTURER REQUIREMENTS.
10. PILES OR RE-BAR DETAILS CAN NOT BE ALTERED WITHOUT WRITTEN CONSENT FROM A CIVIL ENGINEER.
11. A 48 HOUR INSPECTION NOTICE SHALL BE GIVEN BEFORE SCHEDULED POUR WHICH INCLUDES EMAILING THE UNIVERSITY INSPECTOR, ELECTRICAL ENGINEER, AND CIVIL ENGINEER.
12. BOND GROUNDING ROD TO REBAR IN SLAB AND TO GENERATOR FRAME. STUB ROD UP 6" ABOVE TOP OF CONCRETE PAD. SIZE BOND PER NEC 250-66 REQUIREMENTS BASED ON PHASE CONDUCTOR SIZE. PROVIDE BRAIDED, BARE CU BOND CABLE FROM GROUND BAR TO PAD REINFORCING AND TO FRAME. LEAVE SUFFICIENT LACK ABOVE PAD TO TIE TO GENSET FRAME, MINIMUM OF 24" COIL.

NO.	DESCRIPTION	DATE
01	ZONING COMMENTS	09-03-2026
00	ISSUED FOR PERMIT	04-16-2026

REVISION HISTORY

This plan is approved for work indicated on the application specification sheet. All other matters shown are not to be relied upon or to be considered as either been approved or in accordance with applicable codes.

Warning: It is a violation of the state education law for any person, unless acting under the direction of a licensed professional engineer, to alter any item on this plans in any way. If alterations to these plans are made, the alterations shall be made in accordance with the appropriate regulations.

ARCO ENGINEERING, PC
1050 WALL ST. WEST,
SUITE 645,
LYNDHURST, NJ 07071
T: 201 635 0282

PROJECT:
250KW DIESEL GENERATOR INSTALLATION

PROJECT LOCATION:
1 CLARIDGE DRIVE,
VERONA, NJ 07044
BLOCK: 101 LOT: 1

CLIENT:
CLARIDGE HOUSE ONE

TITLE:
250KW DIESEL GENERATOR LAYOUT

SCALE	AS SHOWN
DATE	09-03-2026
DRAWN	JBA
DESIGN	JBA
SIZE	D
FILE NO.	25P3687.00
SHEET	03 OF 04

JOSEPH B. ARCHIBALD, PE
NY075110, NJ 24162

DRAWING NO.
E-101.00

A R C O Engineering, PC

2020 NEC 700.10
WIRING, EMERGENCY SYSTEM

(A) IDENTIFICATION. EMERGENCY CIRCUITS SHALL BE PERMANENTLY MARKED SO THEY WILL BE READILY IDENTIFIED AS A COMPONENT OF AN EMERGENCY CIRCUIT OR SYSTEM BY THE FOLLOWING METHODS:

(1) ALL BOXES AND ENCLOSURES (INCLUDING TRANSFER SWITCHES, GENERATORS, AND POWER PANELS) FOR EMERGENCY CIRCUITS SHALL BE PERMANENTLY MARKED AS A COMPONENT OF AN EMERGENCY CIRCUIT OR SYSTEM.
(2) WHERE BOXES OR ENCLOSURES ARE NOT ENCOUNTERED, EXPOSED CABLE OR RACEWAY SYSTEMS SHALL BE PERMANENTLY MARKED TO BE IDENTIFIED AS A COMPONENT OF AN EMERGENCY CIRCUIT OR SYSTEM, AT INTERVALS NOT TO EXCEED 7.6 M (25 FT).

RECEPTACLES SUPPLIED FROM THE EMERGENCY SYSTEM SHALL HAVE A DISTINCTIVE COLOR OR MARKING ON THE RECEPTACLE COVER PLATES OR THE RECEPTACLES.

(B) WIRING. WIRING FROM AN EMERGENCY SOURCE OR EMERGENCY SOURCE DISTRIBUTION OVERCURRENT PROTECTION TO EMERGENCY LOADS SHALL BE KEPT ENTIRELY INDEPENDENT OF ALL OTHER WIRING AND EQUIPMENT UNLESS OTHERWISE PERMITTED IN 700.10(B)(1) THROUGH (B)(5):

(1) WIRING FROM THE NORMAL POWER SOURCE LOCATED IN TRANSFER EQUIPMENT ENCLOSURES
(2) WIRING SUPPLIED FROM TWO SOURCES IN EXIT OR EMERGENCY LUMINAIRES
(3) WIRING FROM TWO SOURCES IN A LISTED LOAD CONTROL RELAY SUPPLYING EXIT OR EMERGENCY LUMINAIRES, OR IN A COMMON JUNCTION BOX, ATTACHED TO EXIT OR EMERGENCY LUMINAIRES
(4) WIRING WITHIN A COMMON JUNCTION BOX ATTACHED TO UNIT EQUIPMENT, CONTAINING ONLY THE BRANCH CIRCUIT SUPPLYING THE UNIT EQUIPMENT AND THE EMERGENCY CIRCUIT SUPPLIED BY THE UNIT EQUIPMENT
(5) WIRING FROM AN EMERGENCY SOURCE TO SUPPLY EMERGENCY AND OTHER (NONEMERGENCY) LOADS IN ACCORDANCE WITH 700.10(B)(5)A., (B)(5)B., (B)(5)C., AND (B)(5)D. AS FOLLOWS:

a. SEPARATE VERTICAL SWITCHGEAR SECTIONS OR SEPARATE VERTICAL SWITCHBOARD SECTIONS, WITH OR WITHOUT A COMMON BUS, OR INDIVIDUAL DISCONNECTS MOUNTED IN SEPARATE ENCLOSURES SHALL BE USED TO SEPARATE EMERGENCY LOADS FROM ALL OTHER LOADS.
b. THE COMMON BUS OF SEPARATE SECTIONS OF THE SWITCHGEAR, SEPARATE SECTIONS OF THE SWITCHBOARD, OR THE INDIVIDUAL ENCLOSURES SHALL BE EITHER OF THE FOLLOWING:
   (i) SUPPLIED BY SINGLE OR MULTIPLE FEEDERS WITHOUT OVERCURRENT PROTECTION AT THE SOURCE
   (ii) SUPPLIED BY SINGLE OR MULTIPLE FEEDERS WITH OVERCURRENT PROTECTION, PROVIDED THAT THE OVERCURRENT PROTECTION THAT IS COMMON TO AN EMERGENCY SYSTEM AND ANY NONEMERGENCY SYSTEM(S) IS SELECTIVELY COORDINATED WITH THE NEXT DOWNSTREAM OVERCURRENT PROTECTIVE DEVICE IN THE NONEMERGENCY SYSTEM(S)

   INFORMATIONAL NOTE: FOR FURTHER INFORMATION, SEE INFORMATIONAL NOTE FIGURE 700.10(B)(4) AND INFORMATIONAL NOTE FIGURE 700.10(B)(B).

c. EMERGENCY CIRCUITS SHALL NOT ORIGINATE FROM THE SAME VERTICAL SWITCHGEAR SECTION, VERTICAL SWITCHBOARD SECTION, PANELBOARD ENCLOSURE, OR INDIVIDUAL DISCONNECT ENCLOSURE AS OTHER CIRCUITS.
d. IT SHALL BE PERMISSIBLE TO UTILIZE SINGLE OR MULTIPLE FEEDERS TO SUPPLY DISTRIBUTION EQUIPMENT BETWEEN AN EMERGENCY SOURCE AND THE POINT WHERE THE EMERGENCY LOADS ARE SEPARATED FROM ALL OTHER LOADS.

WIRING OF TWO OR MORE EMERGENCY CIRCUITS SUPPLIED FROM THE SAME SOURCE SHALL BE PERMITTED IN THE SAME RACEWAY, CABLE, BOX, OR CABINET.

(C) WIRING DESIGN AND LOCATION. EMERGENCY WIRING CIRCUITS SHALL BE DESIGNED AND LOCATED SO AS TO MINIMIZE THE HAZARDS THAT MIGHT CAUSE FAILURE DUE TO FLOODING, FIRE, ICING, VANDALISM, AND OTHER ADVERSE CONDITIONS.

(D) FIRE PROTECTION

(1) OCCUPANCIES. EMERGENCY SYSTEMS SHALL MEET THE ADDITIONAL REQUIREMENTS IN 700.10(D)(2) THROUGH (D)(4) IN THE FOLLOWING OCCUPANCIES:

(1) ASSEMBLY OCCUPANCIES FOR NOT LESS THAN 1000 PERSONS
(2) BUILDINGS ABOVE 23 M (75 FT) IN HEIGHT
(3) EDUCATIONAL OCCUPANCIES WITH MORE THAN 300 OCCUPANTS

(2) FEEDER-CIRCUIT WIRING. FEEDER-CIRCUIT WIRING SHALL MEET ONE OF THE FOLLOWING CONDITIONS:

(1) THE CABLE OR RACEWAY IS INSTALLED IN SPACES OR AREAS THAT ARE FULLY PROTECTED BY AN APPROVED AUTOMATIC FIRE PROTECTION SYSTEM.
(2) THE CABLE OR RACEWAY IS PROTECTED BY A LISTED ELECTRICAL CIRCUIT PROTECTIVE SYSTEM WITH A MINIMUM 2-HOUR FIRE RATING.

INFORMATIONAL NOTE NO. 1: ELECTRICAL CIRCUIT PROTECTIVE SYSTEMS COULD INCLUDE BUT NOT BE LIMITED TO THERMAL BARRIERS OR A PROTECTIVE SHAFT AND ARE TESTED TO UL 1724, FIRE TESTS FOR ELECTRICAL CIRCUIT PROTECTION SYSTEMS.

INFORMATIONAL NOTE NO. 2: THE LISTING ORGANIZATION PROVIDES INFORMATION FOR ELECTRICAL CIRCUIT PROTECTIVE SYSTEMS ON PROPER INSTALLATION REQUIREMENTS TO MAINTAIN THE FIRE RATING.

(3) THE CABLE OR RACEWAY IS A LISTED FIRE-RESISTIVE CABLE SYSTEM WITH A MINIMUM 2-HOUR FIRE RATING.

INFORMATIONAL NOTE NO. 1: FIRE-RESISTIVE CABLES ARE TESTED TO ANSI/UL 2196-2017, STANDARD FOR FIRE TEST FOR CIRCUIT INTEGRITY OF FIRE-RESISTIVE POWER, INSTRUMENTATION, CONTROL AND DATA CABLES.

INFORMATIONAL NOTE NO. 2: THE LISTING ORGANIZATION PROVIDES INFORMATION FOR FIRE-RESISTIVE CABLE SYSTEMS ON PROPER INSTALLATION REQUIREMENTS TO MAINTAIN THE FIRE RATING.

(4) THE CABLE OR RACEWAY IS PROTECTED BY A LISTED FIRE-RATED ASSEMBLY THAT HAS A MINIMUM FIRE RATING OF 2 HOURS AND CONTAINS ONLY EMERGENCY CIRCUITS.
(5) THE CABLE OR RACEWAY IS ENCASED IN A MINIMUM OF 50 MM (2 IN.) OF CONCRETE.

(3) FEEDER-CIRCUIT EQUIPMENT. EQUIPMENT FOR FEEDER CIRCUITS (INCLUDING TRANSFER SWITCHES, TRANSFORMERS, AND PANELBOARDS) SHALL BE LOCATED EITHER IN SPACES FULLY PROTECTED BY AN APPROVED AUTOMATIC FIRE PROTECTION SYSTEM OR IN SPACES WITH A 2-HOUR FIRE RESISTANCE RATING.

(4) GENERATOR CONTROL WIRING. CONTROL CONDUCTORS INSTALLED BETWEEN THE TRANSFER EQUIPMENT AND THE EMERGENCY GENERATOR SHALL BE KEPT ENTIRELY INDEPENDENT OF ALL OTHER WIRING AND SHALL MEET THE CONDITIONS OF 700.10(D)(2). THE INTEGRITY OF THE GENERATOR REMOTE START CIRCUIT SHALL BE MONITORED FOR BROKEN, DISCONNECTED, OR SHORTED WIRES. LOSS OF INTEGRITY SHALL START THE GENERATOR(S).

2020 NEC 445.18(C)
REMOTE EMERGENCY SHUTDOWN

GENERATORS WITH GREATER THAN 15 KW RATING SHALL BE PROVIDED WITH A REMOTE EMERGENCY STOP SWITCH TO SHUT DOWN THE PRIME MOVER. THE REMOTE EMERGENCY STOP SWITCH SHALL BE LOCATED OUTSIDE THE EQUIPMENT ROOM OR GENERATOR ENCLOSURE AND SHALL ALSO MEET THE REQUIREMENTS OF 445.18(B)(1) AND (B)(2)**.**

ELECTRICAL SINGLE-LINE RISER DIAGRAM NOTES:

1. COORDINATE WITH UTILITY COMPANY FOR SCHEDULE OF SHUTDOWN IF NECESSARY.
2. ALL CONDUCTORS ARE AT 75 DEGREES CELSIUS. UNLESS OTHERWISE NOTED.
3. ELECTRICAL CONTRACTOR SHALL VERIFY WITH UTILITY COMPANY FOR THE ¾Z AND SHORT CIRCUIT CURRENT AVAILABLE AT THE UTILITY TRANSFORMER.
4. EXACT LOCATION OF ELECTRICAL SERVICE TAKE-OFF SHALL BE COORDINATED WITH UTILITY COMPANY.
5. INSTALLATION OF METERING EQUIPMENT IN ACCORDANCE WITH UTILITY COMPANY REQUIREMENTS.
6. FURNISH AND INSTALL SWITCHGEAR / SWITCHBOARD GROUNDING AND BONDING.
7. COORDINATE ALL WORK WITH UTILITY COMPANY TO INSURE TIMELY COMPLETION OF ALL COMPONENTS, ROUTING AND LOCATION.
8. SUBMIT COMPLETE DETAILS OF WORK AS APPROVED BY UTILITY COMPANY INCLUDING COMPONENTS, ROUTING AND LOCATION.
9. PROVIDE ALL INTER-WIRING NECESSARY BETWEEN METERS AND CURRENT TRANSFORMERS.
10. BEFORE PROCEEDING, CONTACT THE UTILITY COMPANY TO COORDINATE SCHEDULE OF WORK BY ALL TRADES AFFECTED BY THE WORK. OBTAIN COPIES OF ALL UTILITY COMPANY DESIGN AND INSTALLATION AND STANDARDS APPLICABLE TO THE WORK TO BE PERFORMED. OBTAIN UTILITY COMPANY APPROVAL FOR WORK TO BE PERFORMED.
11. BEFORE INSTALLATION, SUBMIT APPLICABLE SHOP DRAWINGS INCLUDING NECESSARY DETAILS OF THE USE OF THE OTHER TRADES, SHOULD FIELD CONDITIONS PREVENT INSTALLATION AS APPROVED BY THE UTILITY COMPANY, OBTAIN APPROVAL OF DEVIATIONS PRIOR TO INSTALLATION.
12. CONTRACTOR SHALL EXCAVATE AND BACKFILL NEW POINT OF ENTRY FOR NEW SERVICE.
13. METERS ARE SUPPLIED AND INSTALL BY UTILITY COMPANY.
14. CONTRACTORS SHALL BE RESPONSIBLE FOR BALANCING OF LOADS SO AS TO PREVENT BREAKER ROOM FROM TRIPPING.
15. PROVIDE ALL REQUIRED SLEEVES FOR SERVICE CONDUITS AND SEALS AS PER POWER UTILITY SUPPLIER SPECIFICATION.
16. CONTRACTOR SHALL PROVIDE FUSES CAPABLE OF INTERRUPTING SHORT CIRCUIT AND COORDINATED. ENDLINES SHALL FUSES IF REQUIRED.
17. ELECTRICAL CONTRACTOR SHALL COORDINATE IN FIELD FOR LOCATION OF ALL FEEDERS AND ROUTING OF CONDUIT.
18. PROVIDE ALL REQUIRED JUNCTION BOX, PULL BOX, FASTENING SUPPORT, CLAMPS, ANGLE BOLTS, CHANNEL SUPPORT, BRACKETS OR SPECIAL DETAIL REQUIRED AND NECESSARY FOR PROPER SUPPORT OF ELECTRICAL CONDUIT AND EQUIPMENT.
19. PROVIDE CABLE LIMITER LUGS IN POWER UTILITY SUPPLIER INCOMING FEEDER AT THE SERVICE SWITCH COMPARTMENT TERMINALS.
20. CONTRACTOR SHALL COORDINATE WITH POWER UTILITY SUPPLIER FOR INSTALLATION REQUIREMENTS FOR UNDERGROUND INCOMING SERVICE TO THE POWER UTILITY SUPPLIER APPROVED SERVICE IN BOX AND SERVICE DISCONNECT SWITCH.
21. PROVIDE POWER UTILITY SUPPLIER APPROVED SERVICE SWITCH, C/T COMPARTMENT, METER CENTER, SERVICE END BOX AND PULL SECTION REQUIRED AS PER POWER UTILITY SUPPLIER REQUIREMENT.

GENERATOR SPECIFICATIONS

MODEL: DQDAA
FREQUENCY: 60HZ
FUEL TYPE: DIESEL
KW RATING: 250 STANDBY / 225 PRIME
EMISSION LEVEL:EPA NSPS STATIONARY EMERGENCY TIER 3

FUEL CONSUMPTION:

STANDBY (250KW / 313KVA)				
LOAD:	1/4	1/2	3/4	FULL
US GPH	6.0	10.5	15.1	19.6
L/HR	22.5	39.7	56.9	74.2

PRIME (225KW / 318KVA)				
LOAD:	1/4	1/2	3/4	FULL
US GPH	5.5	9.5	13.6	17.7
L/HR	20.7	36.1	51.5	67.0

ENGINE:	
ENGINE MANUFACTURER:	CUMMINS INC.
ENGINE MODEL:	QSL9-G7
CONFIGURATION:	CAST IRON, IN-LINE 6 CYLINDER
ASPIRATION:	TURBOCHARGED AND CAC
GROSS ENGINE POWER OUTPUT:	346 KWM / 464 BHP (STANDBY); 312 KWM / 419 BHP (PRIME)
BMEP AT SET RATED LOAD:	2606 KPA / 378 PSI (STANDBY); 2351 KPA / 341 PSI (PRIME)
BORE:	114.0 MM / 4.49 IN
STROKE:	145.0 MM / 5.69 IN
RATED SPEED:	1800 RPM
PISTON SPEED:	8.7 M/S / 1707.0 FT/MIN
COMPRESSION RATIO:	16.1:1
LUBE OIL CAPACITY:	30.0 L / 31.7 QT.
OVERSPEED LIMIT:	2070 ± 50
REGENERATIVE POWER:	35.00 KW
FUEL FLOW:	
FUEL FLOW RATED LOAD:	138.1 L/HR / 36.5 US GPH
MAXIMUM INLET RESTRICTION:	152.4 MM HG / 6.0 IN HG
MAXIMUM RETURN RESTRICTION:	254.0 MM HG / 10.0 IN HG
AIR:	
COMBUSTION AIR:	22.3 M^3/MIN / 787 SCFM (STANDBY); 20.8 M^3/MIN / 733 SCFM (PRIME)
MAX AIR CLEANER RESTRICTION:	6.2 KPA / 25.0 IN H2O
ALTERNATOR COOLING AIR:	59.4 M^3/MIN / 2100.0 SCFM
EXHAUST:	
EXHAUST FLOW AT SET RATED LOAD:	54.6 M^3/MIN / 1927 SCFM (STANDBY); 50.8 M^3/MIN / 1796 SCFM (PRIME)
EXHAUST TEMPERATURE:	525°C / 977°F (STANDBY); 495°C / 923°F (PRIME)
MAXIMUM BACK PRESSURE:	10.2 KPA / 41.0 IN H2O

STANDARD SET-MOUNTED RADIATOR COOLING (NON-SEISMIC):

AMBIENT DESIGN:	50°C / 122°F
FAN LOAD:	26.09 KWM / 35HP
COOLANT CAPACITY (W/ RADIATOR):	34.29 L / 9.06 US GAL
COOLING SYSTEM AIR FLOW:	427.58 M^3/MIN / 15100 CFM
TOTAL HEAT REJECTION:	8.93 MJ/MIN / 8467.0 BTU/MIN (STANDBY); 8.55 MJ/MIN / 8104.0 BTU/MIN (PRIME)
MAX COOLING AIR FLOW STATIC RESTRICTION:	0.12 KPA / 0.5 IN H2O

OPTIONAL SET-MOUNTED RADIATOR COOLING W/ SEISMIC FEATURE CODES L228-2 (IBC) AND/OR L225-2 (OSHPD):

AMBIENT DESIGN:	50°C / 122°F
FAN LOAD:	27.8 KWM / 37.2HP
COOLANT CAPACITY (W/ RADIATOR):	30.3 L /8.0 US GAL
COOLING SYSTEM AIR FLOW:	568.1 M^3/MIN / 20075.0 CFM
TOTAL HEAT REJECTION:	8.93 MJ/MIN / 8467.0 BTU/MIN (STANDBY); 8.55 MJ/MIN / 8104.0 BTU/MIN (PRIME)
MAX COOLING AIR FLOW STATIC RESTRICTION:	0.12 KPA / 0.5 IN H2O

WEIGHTS*:

UNIT DRY WEIGHT:	2184 KG / 4814 LBS
UNIT WET WEIGHT:	2234 KG / 4926 LBS

*WEIGHTS REPRESENT A SET WITH STANDARD FEATURES. SEE OUTLINE DRAWINGS FOR WEIGHT OF OTHER CONFIGURATIONS.

DERATING FACTORS:
STANDBY: ENGINE POWER AVAILABLE UP TO 1494 M (4900 FT) AT AMBIENT TEMPERATURE UP TO 40 °C (104 °F). ABOVE THESE ELEVATIONS, DERATE AT 7% PER 400M (1312 FT). ABOVE 40 °C (104 °F) DERATE 5.5% PER 10 °C (18 °F). DERATES MUST BE COMBINED WHEN BOTH ALTITUDE OF 1494 M (4900 FT) AND TEMPERATURE OF 40 °C (104 °F) ARE EXCEEDED.

PRIME: ENGINE POWER AVAILABLE UP TO 1452 M (4764 FT) AT AMBIENT TEMPERATURE UP TO 40 °C (104 °F). ABOVE THESE ELEVATIONS, DERATE AT 7% PER 400M (1312 FT). ABOVE 40 °C (104 °F) DERATE 5.5% PER 10 °C (18 °F). DERATES MUST BE COMBINED WHEN BOTH ALTITUDE OF 1452 M (4764 FT) AND TEMPERATURE OF 40 °C (104 °F) ARE EXCEEDED.

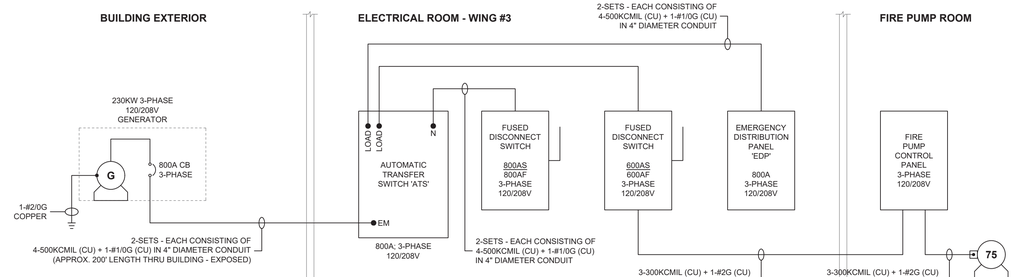

1 EXISTING SINGLE-LINE RISER DIAGRAM
NOT TO SCALE

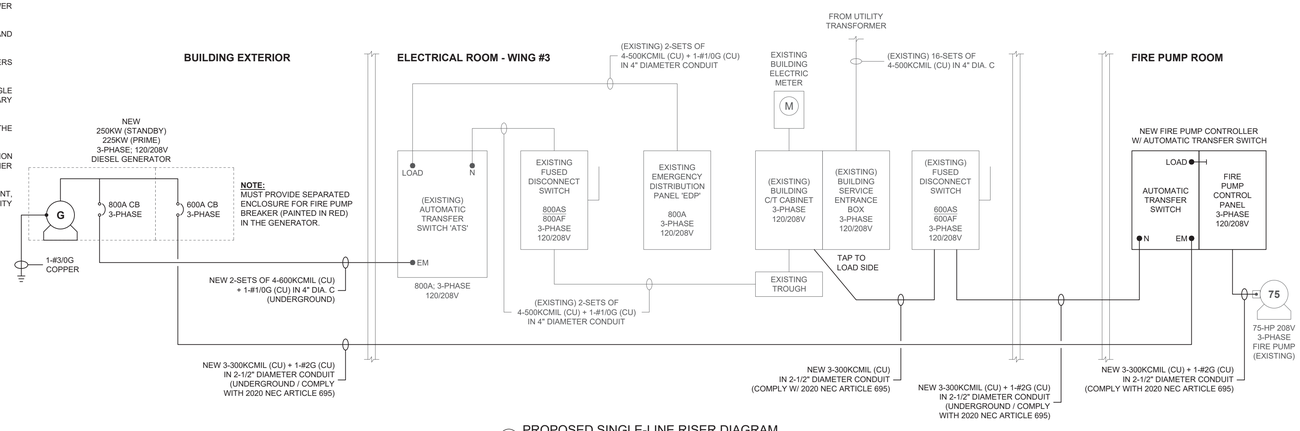

2 PROPOSED SINGLE-LINE RISER DIAGRAM
NOT TO SCALE

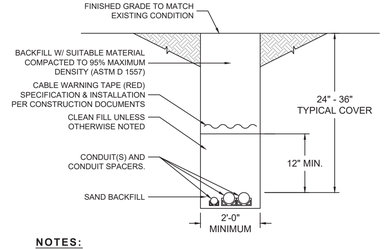

NOTES:

1. THE CLEAN FILL SHALL PASS THROUGH A 3/8" MESH SCREEN AND SHALL NOT CONTAIN SHARP STONES. OTHER BACKFILL SHALL NOT CONTAIN ASHES, CINDERS, SHELLS, FROZEN MATERIAL, LOOSE DEBRIS OR STONES LARGER THAN 2" IN MAXIMUM DIMENSION.
2. WHERE EXISTING UTILITIES ARE LIKELY TO BE ENCOUNTERED, CONTRACTOR SHALL HAND DIG AND PROTECT EXISTING UTILITIES.
3. PROVIDE SEPARATION OF CONDUITS OF DIFFERENT SYSTEMS (I.E., ELECTRIC, CATV & TELEPHONE) PER UTILITY COMPANY REQUIREMENTS. COORDINATE ROUTING OF CONDUITS WITH OTHER TRADES TO MAINTAIN REQUIRED SEPARATION WITH GAS, WATER, ETC., SERVICES.
4. TRENCH SHALL MEET CONSTRUCTION DOCUMENTS.
5. PROVIDE CONDUIT SPACERS 5' O.C. ALL ELBOWS SHALL BE INDEPENDENTLY SUPPORTED.

3 TYPICAL DUCT BANK DETAIL
NOT TO SCALE

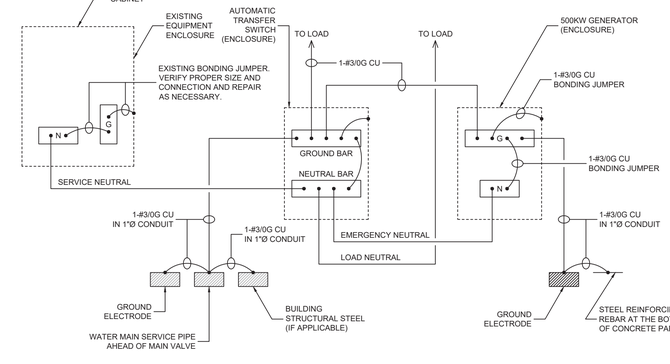

4 GROUNDING SCHEMATIC WIRING DIAGRAM
NOT TO SCALE

GROUNDING NOTES:

1. ALL WORK IS NEW UNLESS OTHERWISE NOTED.
2. ALL GROUNDING WORKS SHALL BE IN ACCORDANCE WITH NATIONAL ELECTRICAL CODE 2020 ARTICLE 250 REGARDLESS WHETHER OR NOT SPECIFICALLY SHOWN IN DIAGRAM.
3. GROUND CONDUCTOR SHALL BE COPPER, GREEN COLOR INSULATION.
4. 5/8" DIAMETER STAINLESS STEEL ROD MINIMUM 8-FEET LONG FULLY BURIED UNDERGROUND PER APPLICABLE PARAGRAPH IN ARTICLE 250 OF NATIONAL ELECTRICAL CODE.
5. ALL EQUIPMENT ENCLOSURES AND CONDUITS CONTAINING SERVICE CABLES SHALL BE EFFECTIVELY BONDED TOGETHER IN ACCORDANCE WITH APPLICABLE PARAGRAPHS IN NEC 2020 ARTICLE 250.

NO.	DESCRIPTION	DATE
01	ZONING COMMENTS	09-03-2026
00	ISSUED FOR PERMIT	04-16-2026

REVISION HISTORY

This plan is approved for work indicated on the application specification sheet. All other matters shown are not to be relied upon or to be considered as either been approved or in accordance with applicable codes.

Warning: It is a violation of the state education law for any person, unless acting under the direction of a licensed professional engineer, to alter any item on this plans in any way. If alterations to these plans are made, the alterations shall be made in accordance with the appropriate regulations.

ARCO ENGINEERING, PC
1050 WALL ST. WEST, SUITE 645,
LYNDHURST, NJ 07071
T: 201 635 0282

PROJECT:
250KW DIESEL GENERATOR INSTALLATION

PROJECT LOCATION:
1 CLARIDGE DRIVE,
VERONA, NJ 07044
BLOCK: 101 LOT: 1

CLIENT:
CLARIDGE HOUSE ONE

TITLE:
ELECTRICAL SINGLE-LINE RISER DIAGRAM

SCALE	AS SHOWN
DATE	09-03-2026
DRAWN	JBA
DESIGN	JBA
SIZE	D
FILE NO.	25P36899
SHEET	04 OF 04

JOSEPH BARRANCA, PE
NY075713 NJ 24162

DRAWING NO.
E-102.00

A R C O Engineering, PC